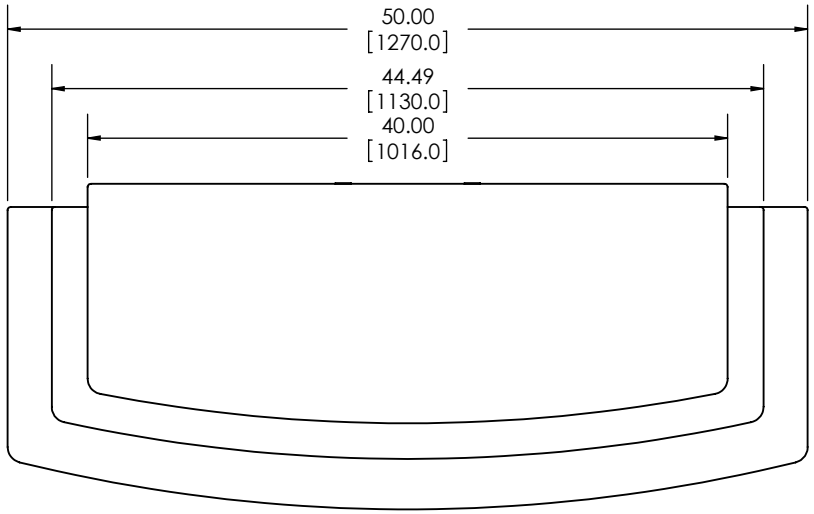

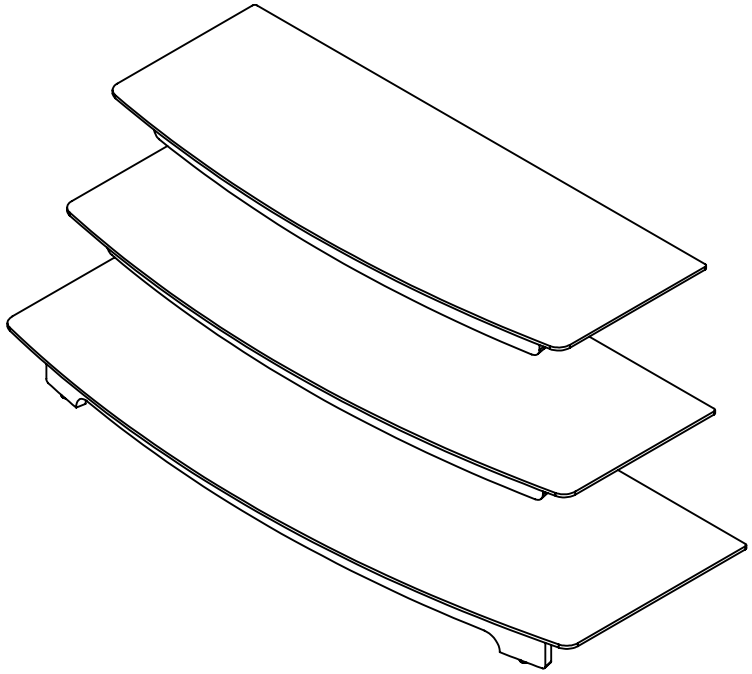

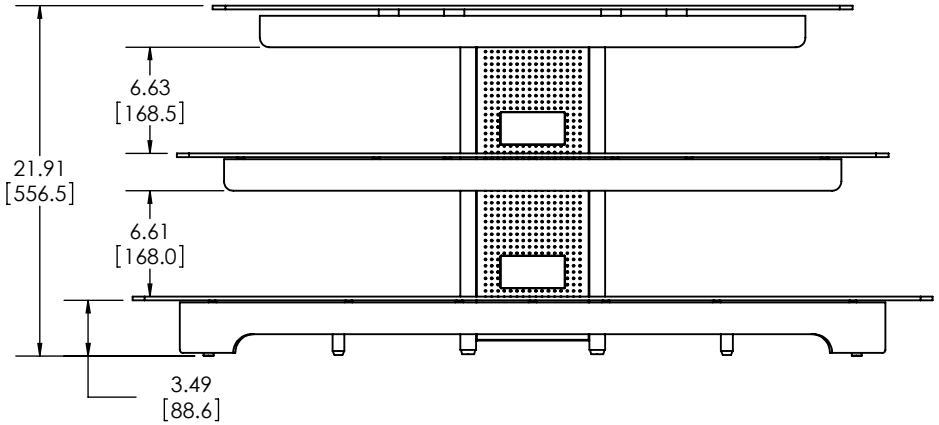

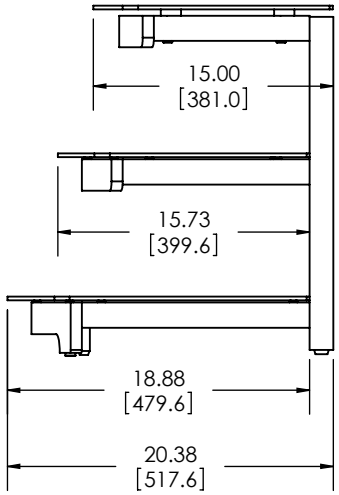

MAXIMUM WEIGHT : 130lbs

PROPRIETARY AND CONFIDENTIAL

THE INFORMATION CONTAINED IN THIS DRAWING IS THE SOLE PROPERTY OF SANUS SYSTEMS, A PRODUCT DIVISION OF MILESTONE AV TECHNOLOGIES. ANY REPRODUCTION IN PART OR AS A WHOLE WITHOUT THE WRITTEN PERMISSION OF SANUS SYSTEMS IS PROHIBITED.

专有且机密资料

本信息属 *SANUS SYSTEMS* 公司专属财产，
非经 *SANUS SYSTEMS*书面许可，严禁复制
其中任何内容

	NAME 姓名	DATE 日期
ENGINEER工程师	JKV	5/3/2010
DESIGNER设计师	JKV	5/3/2010
APPROVED批准	SG	5/3/2010

NOTES注释 :

SANUS™ FOUNDATIONS

DESCRIPTION 描述 :

BFAV550

TEMPLATE REV 模板修订版 : 06 | SCALE 比例1::12 | SHEET 1 OF第 1

5 4 3 2 1